DocuSign Envelope ID: 265CCDF1-B5FF-4EEE-ADEF-CF1A8E2DA2AF

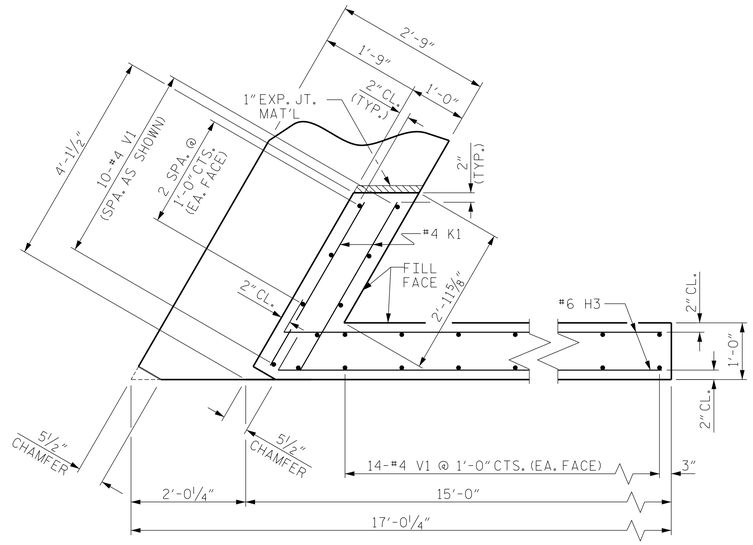

PLAN OF WING (W3)

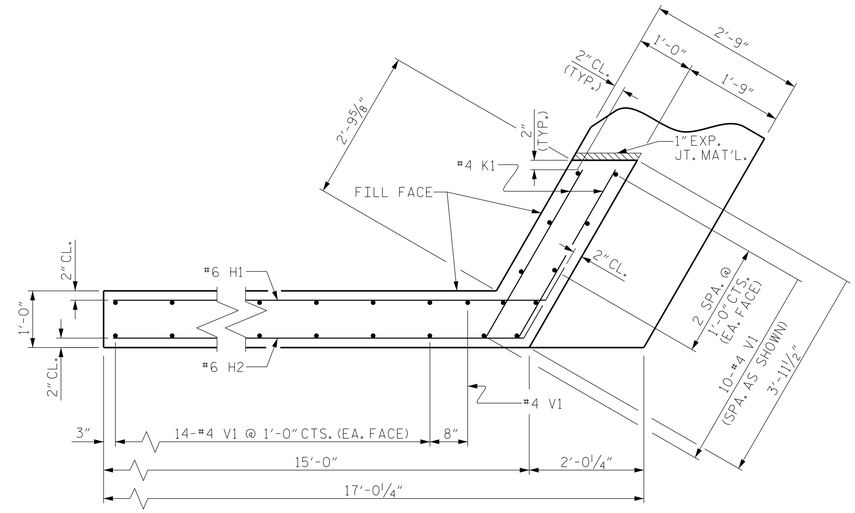

PLAN OF WING (W4)

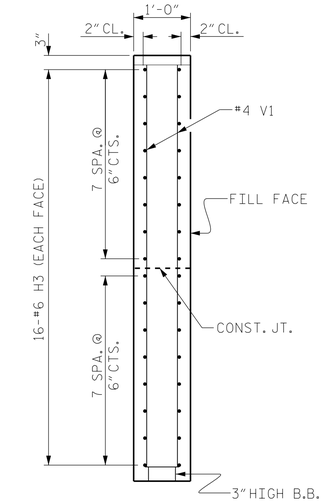

SECTION X-X

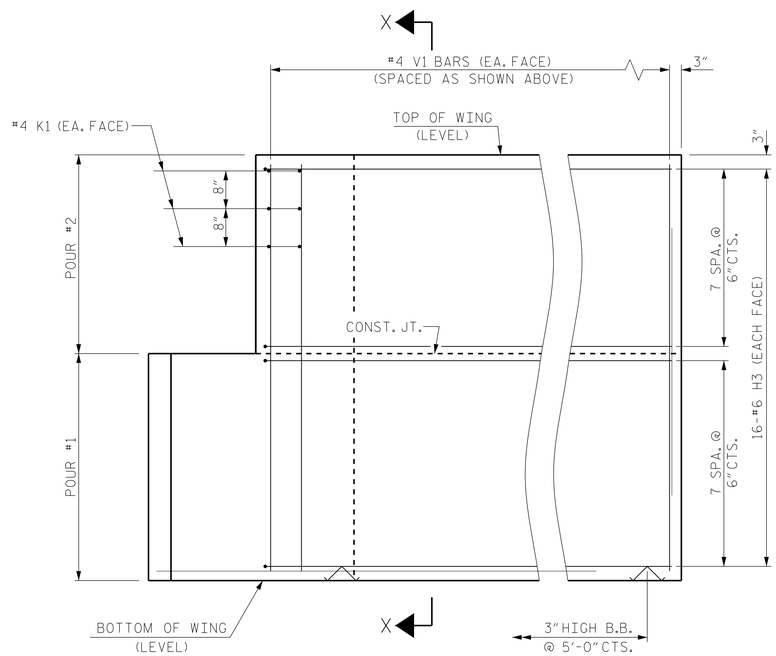

ELEVATION OF WING (W3)

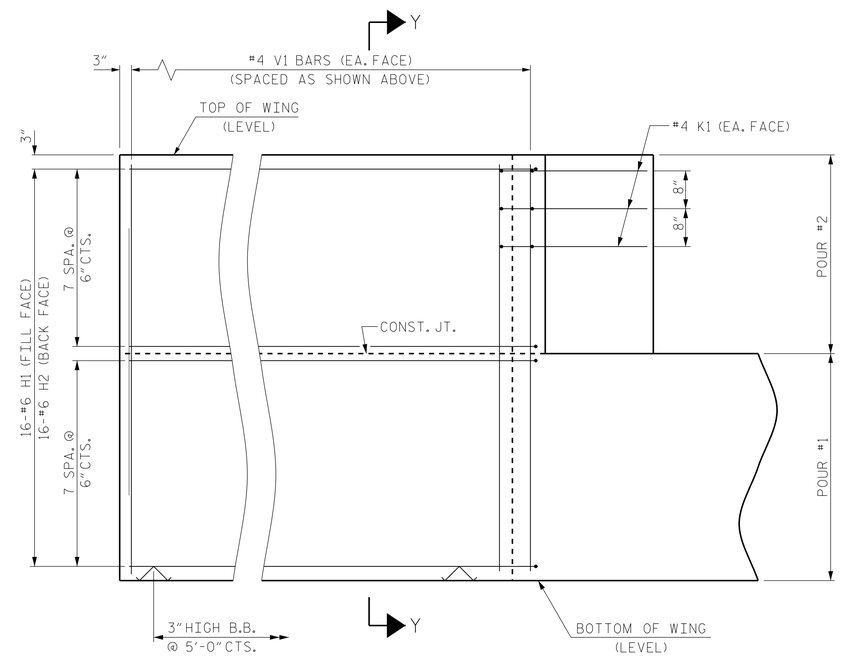

ELEVATION OF WING (W4)

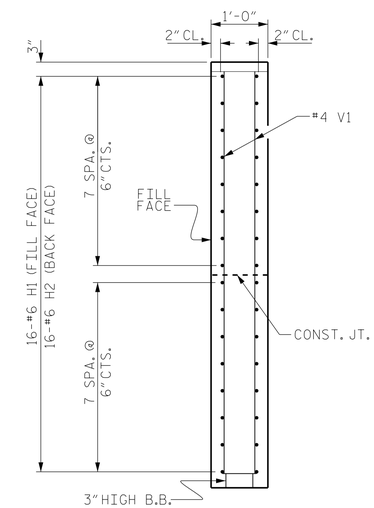

SECTION Y-Y

WING DETAILS

PROJECT NO. 15005.1032011

DURHAM **COUNTY**

STATION: 14+66.50 -L-

SHEET 2 OF 3

Dewberry
2610 WYCLIFF ROAD
SUITE 410
RALEIGH, NC 27607
PHONE: 919.881.9939
NC COA No. F-0929

NORTH CAROLINA PROFESSIONAL SEAL 032076 ENGINEER JENNIFER R. MCROY

DocuSigned by: Jennifer R. McRoy
E12F7C2B12B847C...

3/14/2018

STATE OF NORTH CAROLINA
DEPARTMENT OF TRANSPORTATION
RALEIGH

SUBSTRUCTURE

END BENT No. 2

REVISIONS						SHEET No.
No.	BY:	DATE:	No.	BY:	DATE:	S18
1			3			TOTAL SHEETS
2			4			21

ASSEMBLED BY : JRM DATE : 02/18
CHECKED BY : LMP DATE : 02/18

DOCUMENT NOT CONSIDERED FINAL UNLESS ALL SIGNATURES COMPLETED

2/12/2018 12:32:54 PM
S18_REDWOOD RD_EB2WINGS.dgn
USER: jmcroy

STD. NO. EB_36_120S_39BB