DocuSign Envelope ID: 265CCDF1-B5FF-4EEE-ADEF-CF1A8E2DA2AF

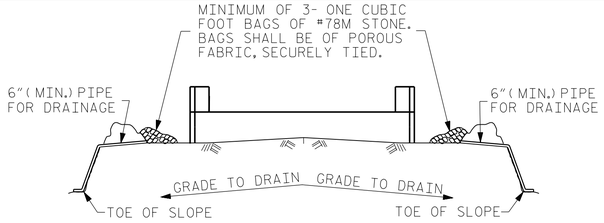

BAGGED STONE AND PIPE SHALL BE PLACED IMMEDIATELY AFTER COMPLETION OF END BENT EXCAVATION. PIPE MAY BE EITHER CONCRETE, CORRUGATED STEEL, CORRUGATED ALUMINUM ALLOY, OR CORRUGATED PLASTIC. PERFORATED PIPE WILL NOT BE ALLOWED.

BAGGED STONE SHALL REMAIN IN PLACE UNTIL THE ENGINEER DIRECTS THAT IT BE REMOVED. THE CONTRACTOR SHALL REMOVE AND DISPOSE OF SILT ACCUMULATIONS AT BAGGED STONE WHEN SO DIRECTED BY THE ENGINEER. BAGS SHALL BE REMOVED AND REPLACED WHENEVER THE ENGINEER DETERMINES THAT THEY HAVE DETERIORATED AND LOST THEIR EFFECTIVENESS.

NO SEPARATE PAYMENT WILL BE MADE FOR THIS WORK AND THE ENTIRE COST OF THIS WORK SHALL BE INCLUDED IN THE UNIT CONTRACT PRICE BID FOR THE SEVERAL PAY ITEMS.

TEMPORARY DRAINAGE AT END BENT

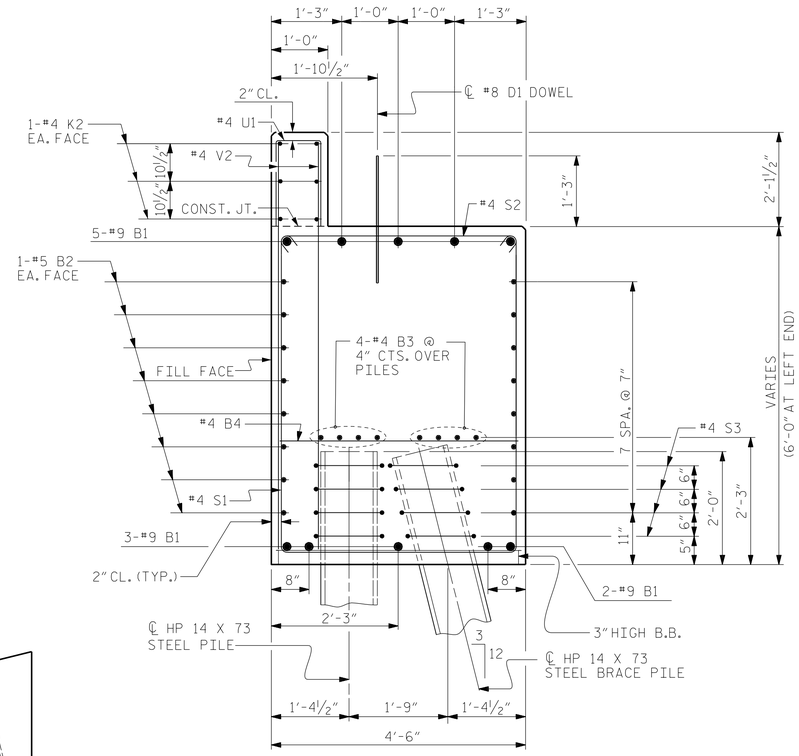

SECTION A-A

(CONCRETE COLLAR NOT SHOWN FOR CLARITY. SEE "CORROSION PROTECTION FOR STEEL PILES DETAIL.")

BAR TYPES

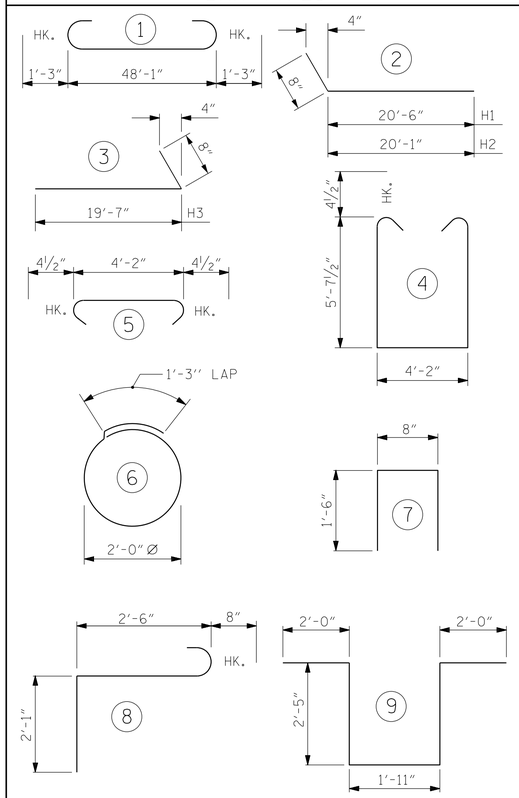

ALL BAR DIMENSIONS ARE OUT TO OUT.

BILL OF MATERIAL

FOR END BENT No. 1

BAR	NO.	SIZE	TYPE	LENGTH	WEIGHT
B1	10	#9	1	50'-7"	1720
B2	32	#5	STR	25'-8"	857
B3	16	#4	STR	25'-8"	275
B4	12	#4	STR	4'-2"	34
D1	24	#8	STR	2'-3"	144
H1	18	#6	2	21'-2"	573
H2	18	#6	2	20'-9"	561
H3	36	#6	3	20'-3"	1095
K1	12	#4	STR	3'-5"	27
K2	12	#4	STR	25'-4"	203
S1	62	#4	4	16'-2"	670
S2	62	#4	5	4'-11"	204
S3	28	#4	6	7'-7"	142
S4	6	#6	8	5'-3"	48
S5	6	#6	9	10'-9"	97
U1	41	#4	7	3'-8"	100
V1	99	#4	STR	9'-7"	634
V2	82	#4	STR	7'-8"	420

REINFORCING STEEL 7804 LBS.

CLASS A CONCRETE BREAKDOWN

POUR #1 CAP, LOWER PART OF WINGS & COLLARS 58.7 C.Y.

POUR #2 BACKWALL & UPPER PART OF WINGS 9.7 C.Y.

TOTAL CLASS A CONCRETE 68.4 C.Y.

END BENT No. 1
HP 14 X 73 STEEL PILES

NO: 9 LIN. FT.- 225

PILE DRIVING EQUIPMENT SETUP FOR HP 14 X 73 STEEL PILES NO: 9

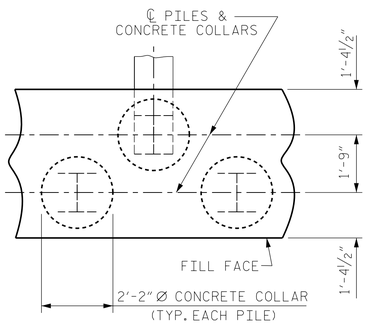

PLAN

NOTE: REINFORCING STEEL AND CONCRETE COLLAR NOT SHOWN ON BRACE PILE FOR CLARITY.

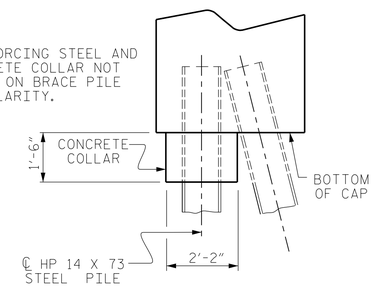

ELEVATION

CORROSION PROTECTION FOR STEEL PILES DETAIL

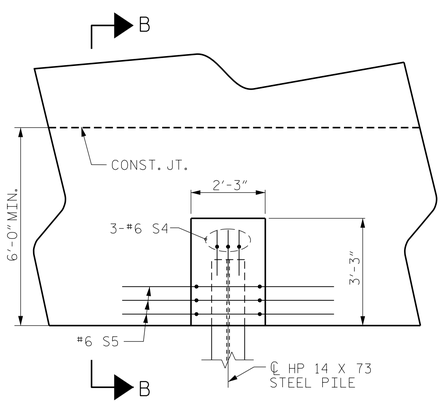

ELEVATION

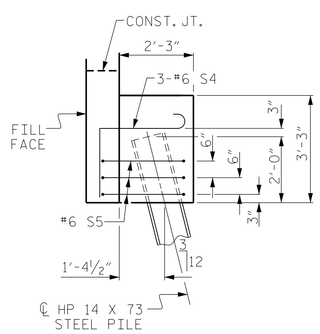

SECTION B-B

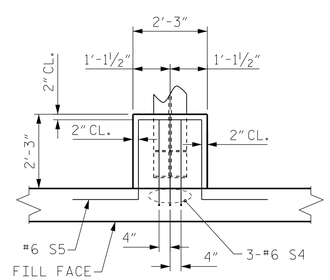

PLAN

WING CAP PILE DETAILS

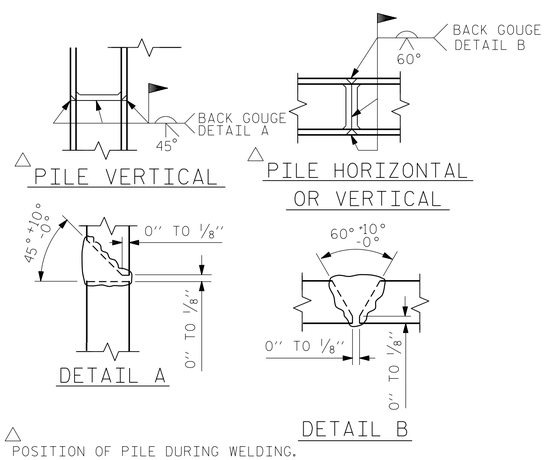

△ POSITION OF PILE DURING WELDING.

PILE SPLICE DETAILS

PROJECT NO. 15005.1032011

DURHAM COUNTY

STATION: 14+66.50 -L-

SHEET 3 OF 3

Dewberry
2610 WYCLIFF ROAD
SUITE 410
RALEIGH, NC 27607
PHONE: 919.881.9939
NC COA No. F-0929

NORTH CAROLINA PROFESSIONAL SEAL 032066 ENGINEER JENNIFER R. McROY

DocuSigned by: Jennifer R. McRoy
E1A9BD128487E...

3/14/2018

STATE OF NORTH CAROLINA
DEPARTMENT OF TRANSPORTATION
RALEIGH

SUBSTRUCTURE

END BENT No. 1

REVISIONS						SHEET No.
No.	BY:	DATE:	No.	BY:	DATE:	S16
1			3			TOTAL SHEETS
2			4			21

DOCUMENT NOT CONSIDERED FINAL UNLESS ALL SIGNATURES COMPLETED

ASSEMBLED BY : JRM DATE : 02/18
CHECKED BY : LMP DATE : 02/18

2/15/2018 4:01:40 PM
FILE: S16_REDWOOD RD_EBIDTLS.dgn
USER: jmcroy