DocuSign Envelope ID: 265CCDF1-B5FF-4EEE-ADEF-CF1A8E2DA2AF

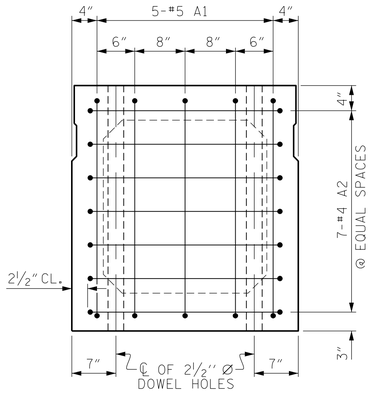

END ELEVATION

SHOWING PLACEMENT OF #5 & #4 "A" BARS AND LOCATION OF DOWEL HOLES. (INTERIOR BOX BEAM SECTION SHOWN-EXTERIOR SECTION SIMILAR EXCEPT SHEAR KEY LOCATION. STRAND LAYOUT NOT SHOWN.)

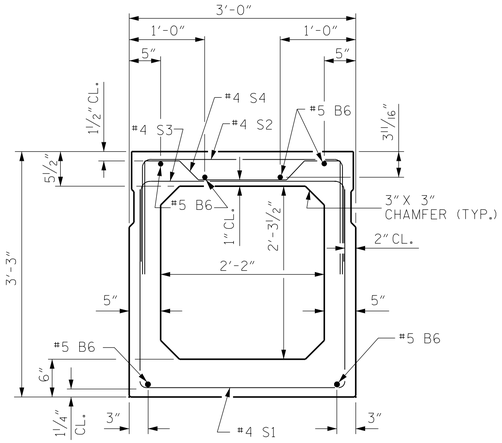

INTERIOR BOX BEAM SECTION

(STRAND LAYOUT NOT SHOWN)

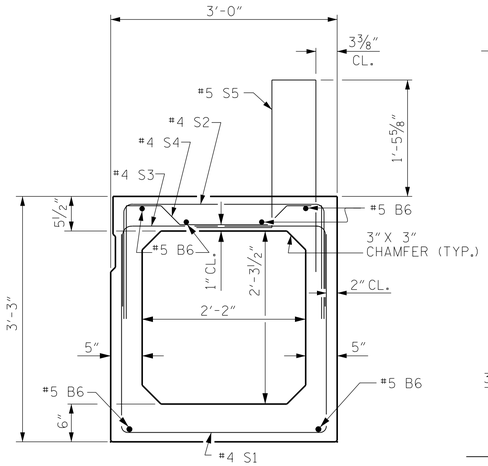

EXTERIOR BOX BEAM SECTION

(STRAND LAYOUT NOT SHOWN)

0.6" Ø LOW RELAXATION STRAND LAYOUT

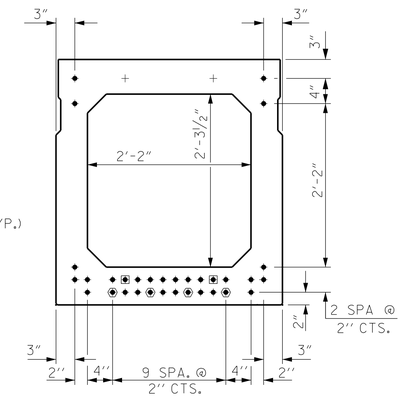

TYPICAL STRAND LOCATION

(32 STRANDS REQUIRED)

BAR TYPES

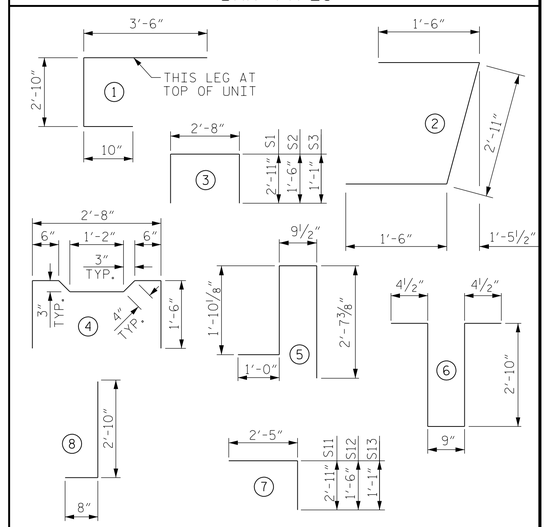

ALL BAR DIMENSIONS ARE OUT TO OUT

DEBONDING LEGEND

- ● FULLY BONDED STRANDS
- ◉ STRANDS DEBONDED FOR 4'-0" FROM END OF GIRDER
- ⬢ STRANDS DEBONDED FOR 12'-0" FROM END OF GIRDER

BOND SHALL BE BROKEN ON STRANDS AS SHOWN FOR THE SPECIFIED LENGTH FROM EACH END OF THE BOX BEAM. SEE STANDARD SPECIFICATIONS ARTICLE 1078-7.

GRADE 270 STRANDS	
	0.6" Ø L.R.
AREA (SQUARE INCHES)	0.217
ULTIMATE STRENGTH (LBS. PER STRAND)	58,600
APPLIED PRESTRESS (LBS. PER STRAND)	43,950

BILL OF MATERIAL FOR ONE BOX BEAM SECTION

				EXTERIOR UNIT		INTERIOR UNIT	
BAR	NUMBER	SIZE	TYPE	LENGTH	WEIGHT	LENGTH	WEIGHT
A1	10	#5	1	7'-2"	75	7'-2"	75
A2	44	#4	2	5'-11"	174	5'-11"	174
B6	12	#5	STR	53'-5"	669	53'-5"	669
K1	15	#4	6	7'-2"	72	7'-2"	72
K2	10	#4	STR	2'-10"	19	2'-10"	19
S1	80	#4	3	8'-6"	455	8'-6"	455
S2	80	#4	3	5'-8"	303	5'-8"	303
S3	141	#4	3	4'-10"	456	4'-10"	456
S4	61	#4	4	5'-10"	238	5'-10"	238
S11	32	#4	7	5'-4"	114	5'-4"	114
S12	32	#4	7	3'-11"	84	3'-11"	84
S13	32	#4	7	3'-6"	75	3'-6"	75
✳ S5	97	#5	5	6'-3"	633	--	--
✳ S10	16	#5	8	3'-6"	58	--	--
REINFORCING STEEL				2734	LBS.	2734	LBS.
✳ EPOXY COATED REINF. STEEL				691	LBS.		
7500 P.S.I. CONCRETE				20.7	CU. YDS.	20.6	CU. YDS.
0.6" Ø L.R. STRANDS				No. 32		No. 32	

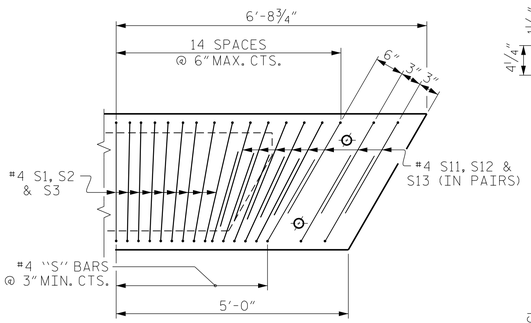

DETAIL "B"

EXTERIOR UNIT SHOWN, INTERIOR UNIT SIMILAR. "B" BARS AND "A" BARS NOT SHOWN. #5 S5 AND #5 S10 BARS IN EXTERIOR UNIT NOT SHOWN.

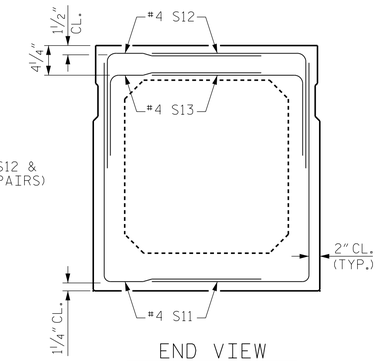

END VIEW

(SHOWING #4 "S" BARS IN END OF BEAM)

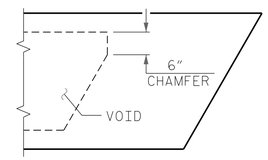

CHAMFER DETAIL

SHOWING 6" VOID CHAMFER

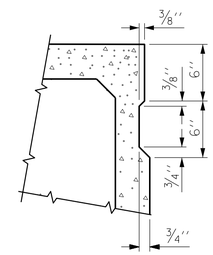

SHEAR KEY DETAIL

NOTE: OMIT SHEAR KEY ON OUTSIDE FACE OF EXTERIOR BOX BEAMS.

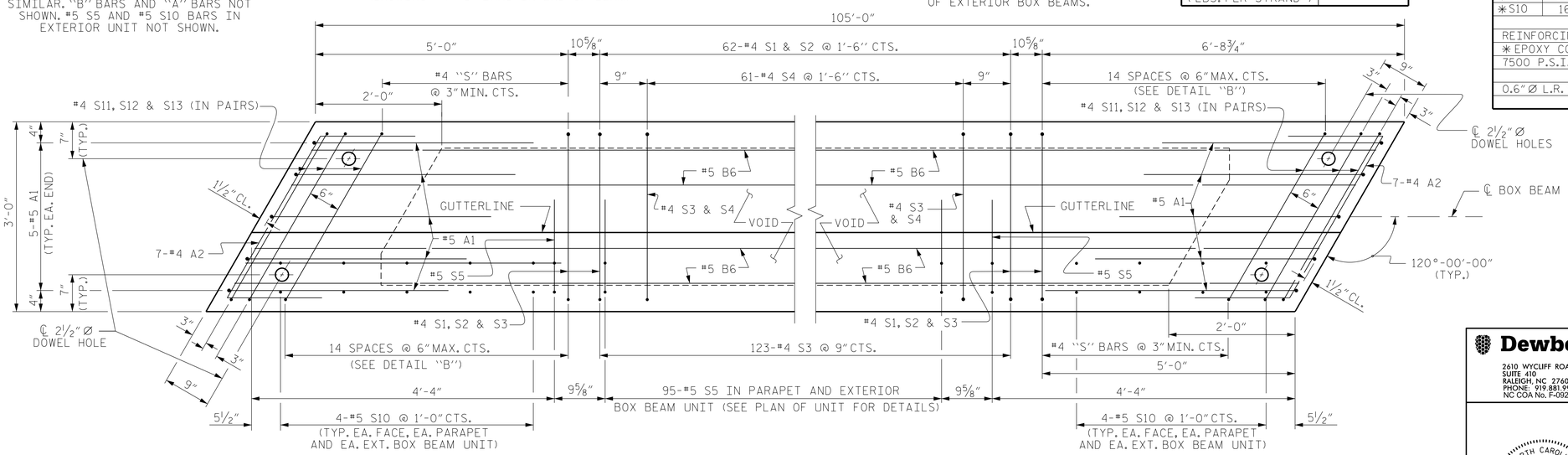

PLAN OF 105' BOX BEAM

EXTERIOR UNIT SHOWN, INTERIOR UNIT SIMILAR EXCEPT OMIT #5 S5 & #5 S10 BARS.
FOR THREADED INSERTS, SEE SHEET 1 OF 5.
FOR LOCATION OF DIAPHRAGMS, SEE SHEET 2 OF 5.
FOR REINFORCING STEEL IN DIAPHRAGMS, SEE SHEET 4 OF 5.
FOR SPACING OF S10 BARS IN END POST, SEE SHEET 5 OF 5.

PROJECT NO. 15005.1032011
DURHAM **COUNTY**
STATION: 14+66.50 -L-

SHEET 3 OF 5

Dewberry
2610 WYCLIFF ROAD
SUITE 410
RALEIGH, NC 27607
PHONE: 919.881.9939
NC COA No. F-0929

NORTH CAROLINA PROFESSIONAL SEAL 039279 ENGINEER JENNIFER R. McROY
Docusigned by: Jennifer R. McRoy
3/14/2018

STATE OF NORTH CAROLINA
DEPARTMENT OF TRANSPORTATION
RALEIGH

3'-0" X 3'-3" PRESTRESSED CONCRETE BOX BEAM UNIT

REVISIONS						SHEET No.
No.	BY:	DATE:	No.	BY:	DATE:	S07
1			3			TOTAL SHEETS
2			4			21

DOCUMENT NOT CONSIDERED FINAL UNLESS ALL SIGNATURES COMPLETED

DRAWN BY :	JRM	DATE :	02/18
CHECKED BY :	LMP	DATE :	02/18

2/12/2018 4:29:33 PM
S07_REDWOOD RD_SPANDTLS-1.dgn
USER: jmcroy