DocuSign Envelope ID: 265CCDF1-B5FF-4EEE-ADEF-CF1A8E2DA2AF

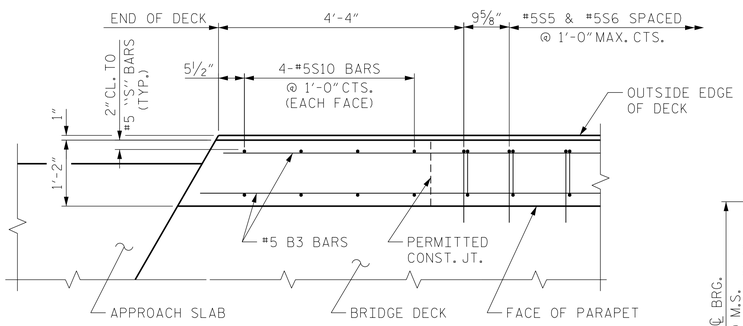

PLAN OF PARAPET

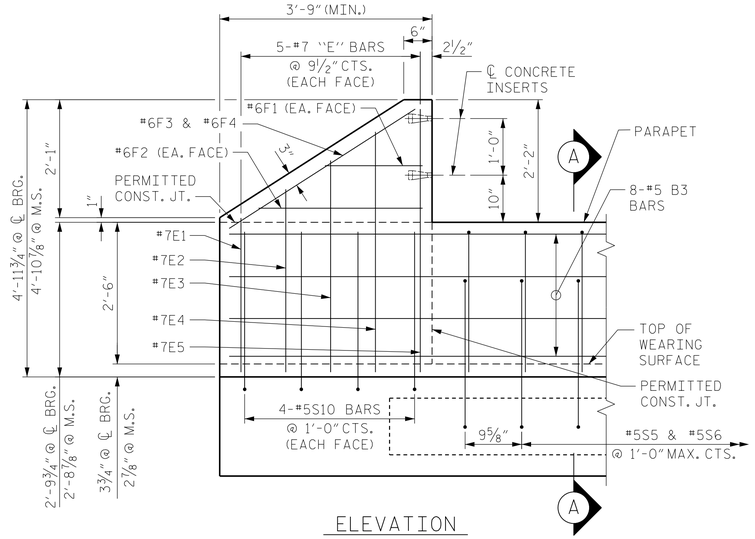

ELEVATION

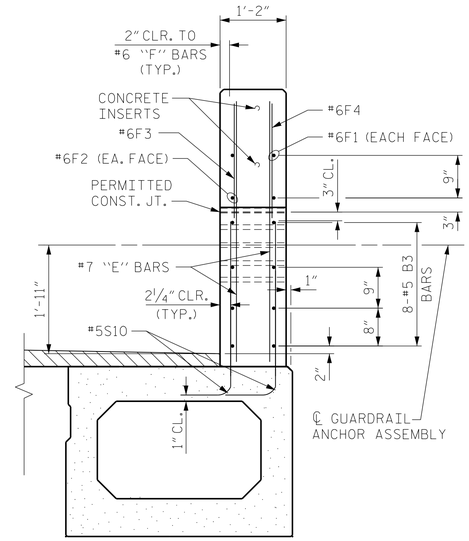

END VIEW

BILL OF MATERIAL FOR PARAPET & END POSTS

BAR	NO.	SIZE	TYPE	LENGTH	WEIGHT
✱B3	96	#5	STR	14'-8"	1469
✱B4	32	#5	STR	15'-5"	515
✱E1	8	#7	STR	2'-8"	44
✱E2	8	#7	STR	3'-3"	54
✱E3	8	#7	STR	3'-9"	62
✱E4	8	#7	STR	4'-3"	70
✱E5	8	#7	STR	4'-7"	75
✱F1	8	#6	STR	1'-9"	21
✱F2	8	#6	STR	2'-11"	35
✱F3	4	#6	STR	3'-6"	20
✱F4	4	#6	STR	4'-0"	25
✱S6	194	#5	9	5'-8"	1147

✱EPOXY COATED REINFORCING STEEL	LBS.	3537
CLASS AA CONCRETE	CU.YDS.	26.0
TOTAL LIN. FT. OF CONCRETE PARAPET		210

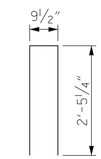

⑨

BAR TYPE

BAR DIMENSIONS ARE OUT TO OUT

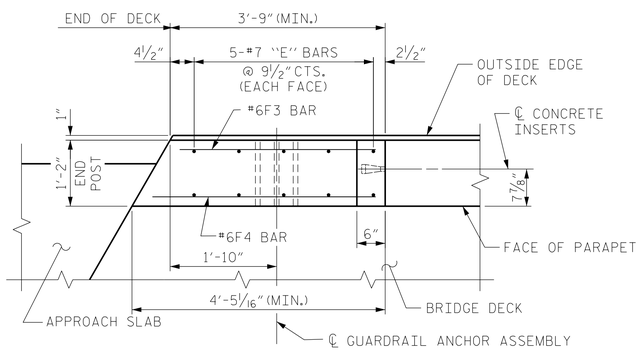

PLAN OF END POST AT NW & SE CORNERS

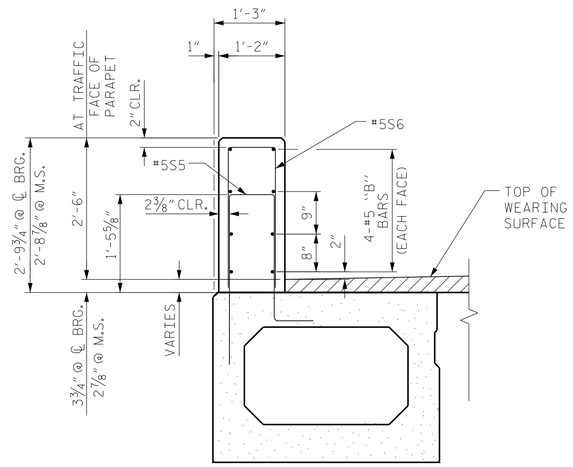

SECTION "A-A"

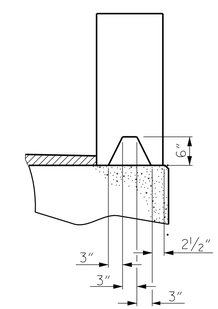

SECTION S-S

AT DAM IN OPEN JOINT
(THIS IS TO BE USED ONLY WHEN SLIP FORM IS USED)

BOX BEAM UNITS REQUIRED

	NUMBER	LENGTH	TOTAL LENGTH
EXTERIOR B.B.	2	105'-0"	210'-0"
INTERIOR B.B.	10	105'-0"	1050'-0"
TOTAL	12	———	1260'-0"

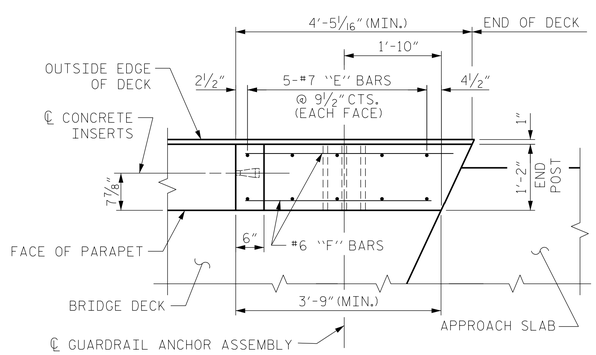

PLAN OF END POST AT NE & SW CORNERS

GUTTERLINE ASPHALT THICKNESS & RAIL HEIGHT

	ASPHALT OVERLAY THICKNESS @ MID-SPAN	RAIL HEIGHT @ MID-SPAN
105' UNIT	2⅞"	2'-8⅞"

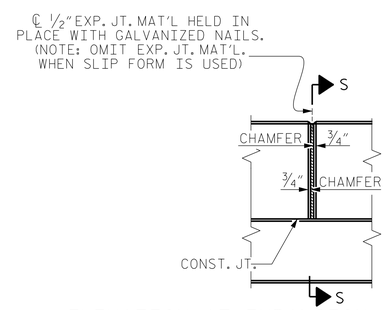

ELEVATION AT EXPANSION JOINTS

PROJECT NO. 15005.1032011

DURHAM COUNTY

STATION: 14+66.50 -L-

SHEET 5 OF 5

Dewberry
2610 WYCLIFF ROAD
SUITE 410
RALEIGH, NC 27607
PHONE: 919.881.9939
NC COA No. F-0929

NORTH CAROLINA PROFESSIONAL SEAL ENGINEER JENNIFER R. MCROY

Digitally signed by Jennifer R. McRoy
CN=JENNIFER R. MCROY, C=US
3/14/2018

STATE OF NORTH CAROLINA
DEPARTMENT OF TRANSPORTATION
RALEIGH

3'-0" X 3'-3" PRESTRESSED CONCRETE BOX BEAM UNIT

REVISIONS								SHEET No.
No.	BY:	DATE:	No.	BY:	DATE:			S09
1			3					TOTAL SHEETS
2			4					21

DOCUMENT NOT CONSIDERED FINAL UNLESS ALL SIGNATURES COMPLETED

DRAWN BY :	JRM	DATE :	02/18
CHECKED BY :	LMP	DATE :	02/18

2/15/2018 4:27:44 PM
S09 REDWOOD RD SPANDTLS-3.dgn
USER: mcroy