DocuSign Envelope ID: 265CCDF1-B5FF-4EEE-ADEF-CF1A8E2DA2AF

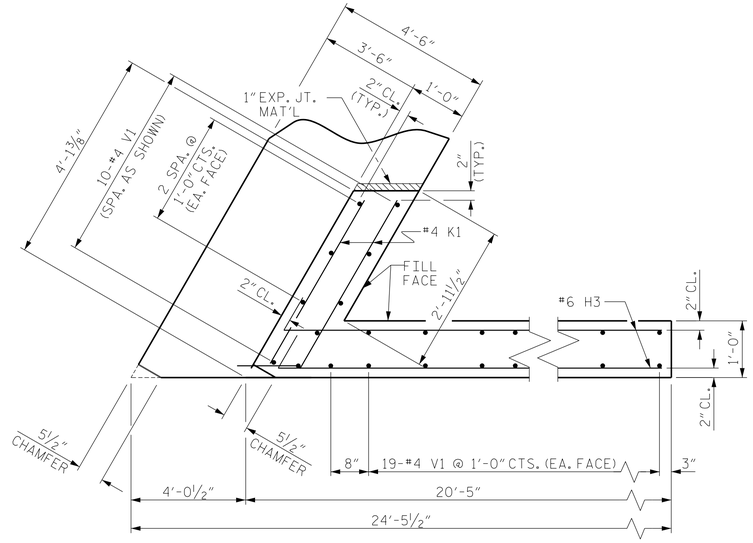


PLAN OF WING (W1)

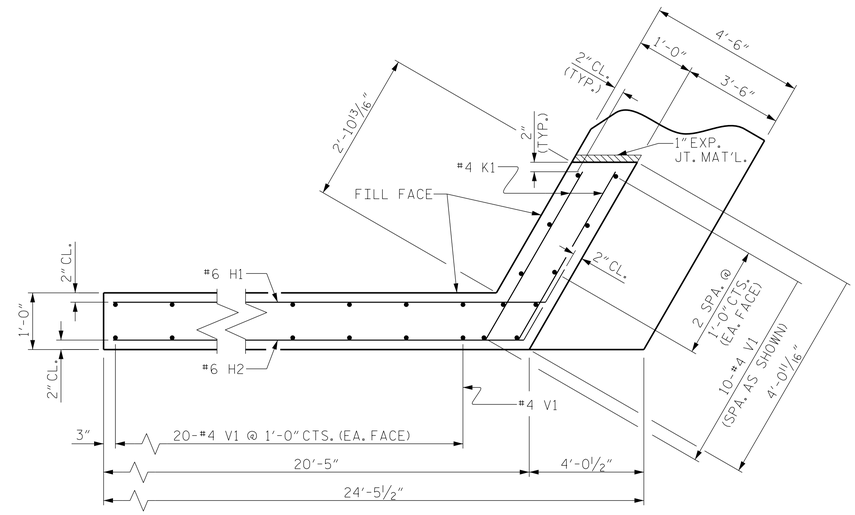


PLAN OF WING (W2)

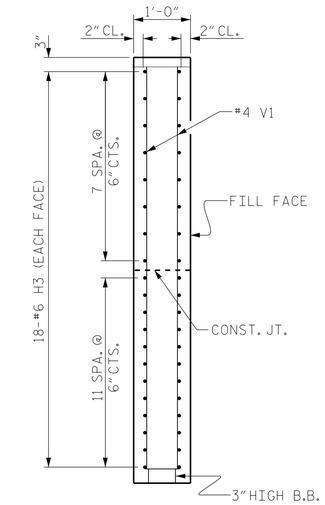


SECTION X-X

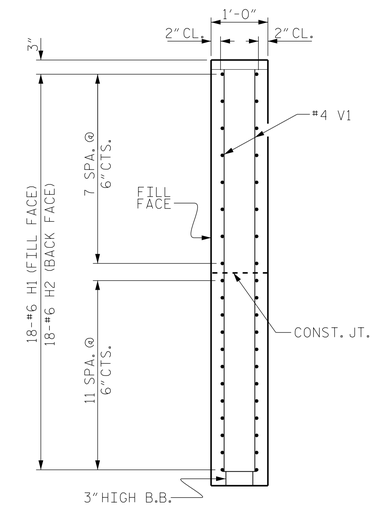


SECTION Y-Y

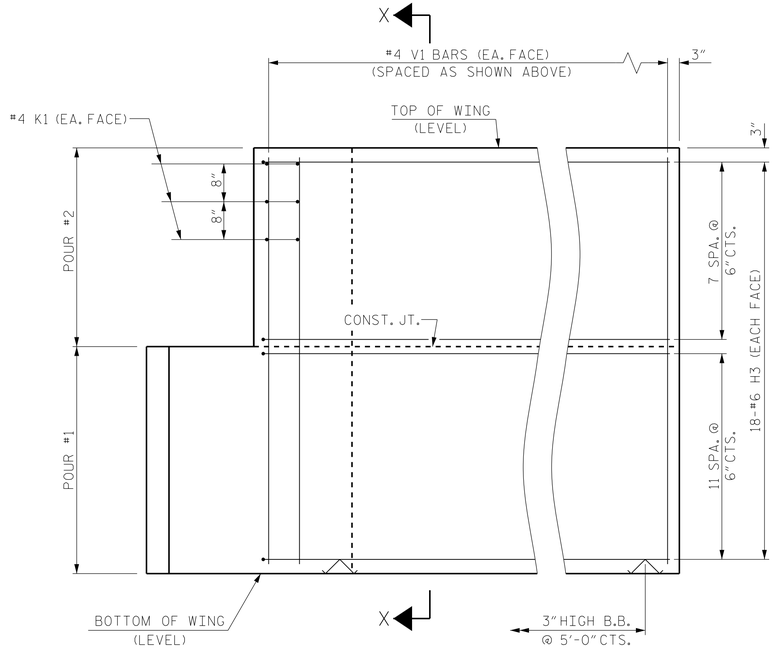


ELEVATION OF WING (W1)

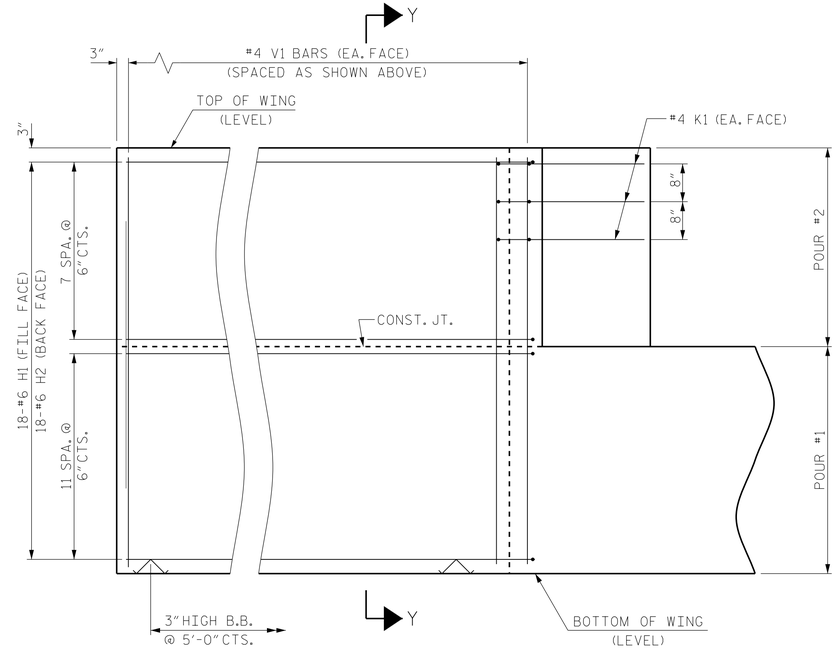


ELEVATION OF WING (W2)

WING DETAILS

(WING PILE CAP NOT SHOWN FOR CLARITY.
SEE SHEET 3 OF 3 FOR WING PILE CAP DETAILS.)

**PROJECT NO.** 15005.1032011

DURHAM **COUNTY**

**STATION:** 14+66.50 -L-

SHEET 2 OF 3

**Dewberry**
2610 WYCLIFF ROAD
SUITE 410
RALEIGH, NC 27607
PHONE: 919.881.9939
NC COA No. F-0929

NORTH CAROLINA PROFESSIONAL SEAL ENGINEER JENNIFER R. McRDY
DocuSigned by: Jennifer R. McRdy
E1A6C791288475...
3/14/2018

STATE OF NORTH CAROLINA
DEPARTMENT OF TRANSPORTATION
RALEIGH

SUBSTRUCTURE

END BENT No. 1

| REVISIONS | | | | | | SHEET No. |
|---|---|---|---|---|---|---|
| No. | BY: | DATE: | No. | BY: | DATE: | S15 |
| 1 | | | 3 | | | TOTAL SHEETS |
| 2 | | | 4 | | | 21 |

ASSEMBLED BY : JRM DATE : 02/18
CHECKED BY : LMP DATE : 02/18

**DOCUMENT NOT CONSIDERED FINAL UNLESS ALL SIGNATURES COMPLETED**

2/12/2018 12:45:48 PM
FILE: REDWOOD RD_EB1WINGS.dgn
USER: jmcroy