DocuSign Envelope ID: 265CCDF1-B5FF-4EEE-ADEF-CF1A8E2DA2AF

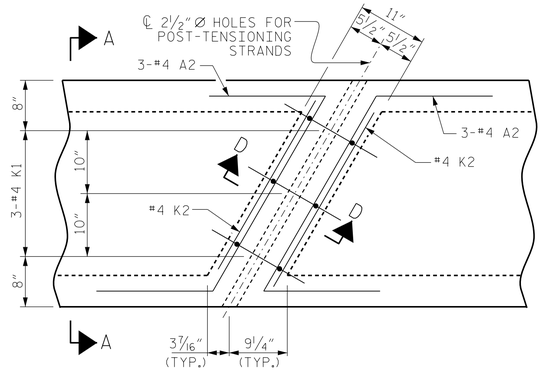

PLAN

DEAD LOAD DEFLECTION AND CAMBER		
	3′-0″ x 3′-3″	
105′ BOX BEAM UNIT (NC & SE)	0.6″ Ø L.R. STRAND	
CAMBER (SLAB ALONE IN PLACE)	1¾″	↑
DEFLECTION DUE TO SUPERIMPOSED DEAD LOAD**	⅞″	↓
FINAL CAMBER	⅞″	↑

** INCLUDES FUTURE WEARING SURFACE

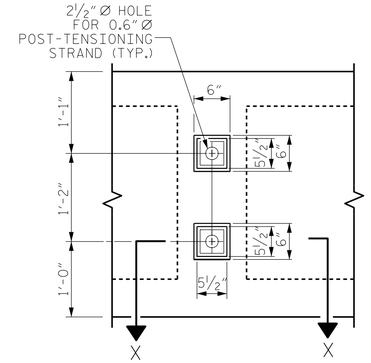

VIEW Y-Y

SHOWING ELEVATION VIEW OF GROUTED RECESS

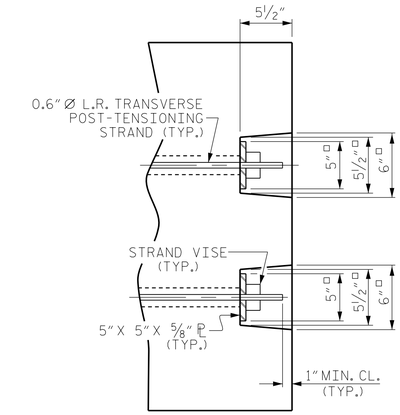

DETAIL "C"

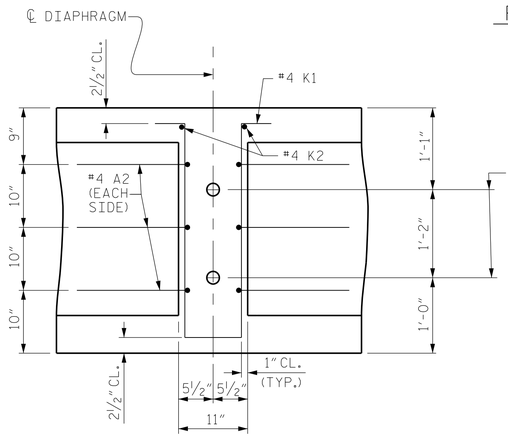

SECTION D-D

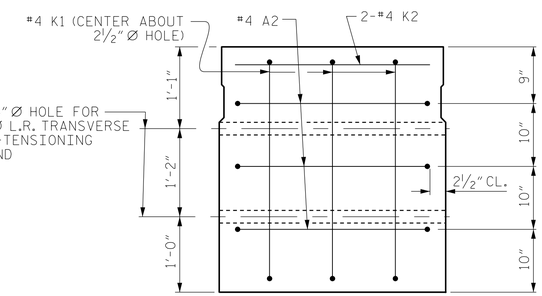

SECTION A-A

VOIDS NOT SHOWN

DOUBLE DIAPHRAGM DETAILS

#4 "S" BARS NOT SHOWN. #4 "S" BARS MAY BE SHIFTED SLIGHTLY TO CLEAR 2½″ Ø HOLE.

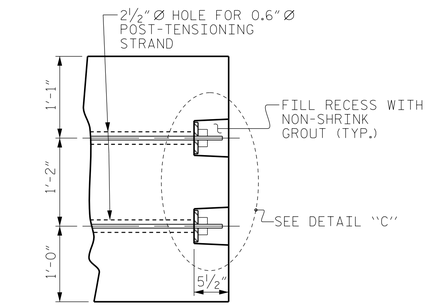

PART SECTION AT RECESS

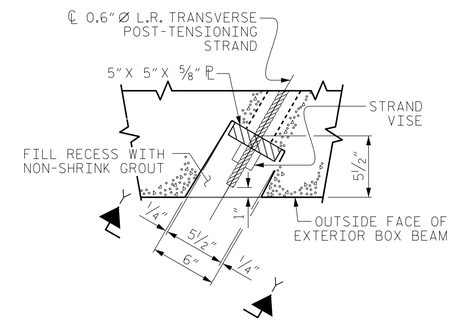

SECTION X-X

SHOWING PLAN VIEW OF GROUTED RECESS

GROUTED RECESS DETAIL AT END OF POST-TENSIONED STRANDS OF EXTERIOR BOX BEAM

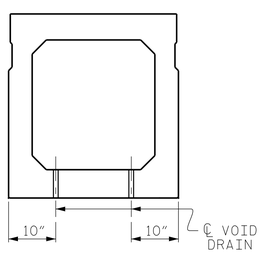

SECTION B-B

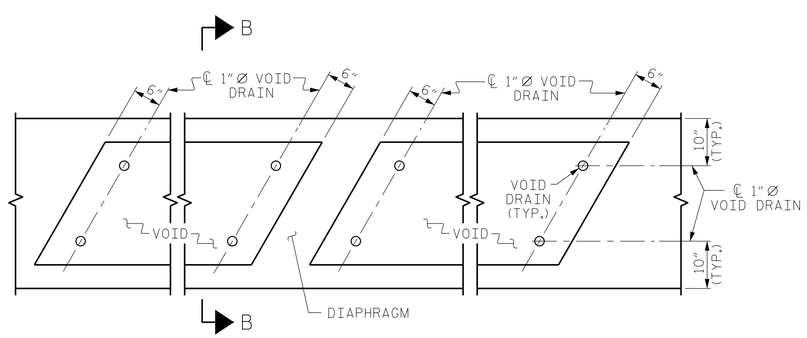

PART PLAN

VOID DRAIN DETAILS

(DIMENSIONS SHOWN ARE TYPICAL FOR EACH VOID)

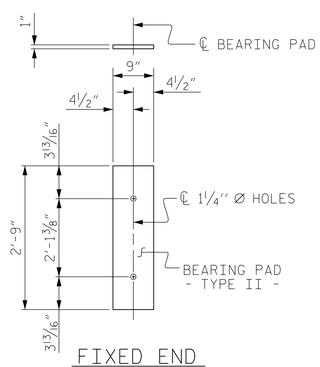

FIXED END

(TYPE II - 24 REQ'D)

ELASTOMERIC BEARING DETAILS

ELASTOMER IN ALL BEARINGS SHALL BE 60 DUROMETER HARDNESS.

PROJECT NO. 15005.1032011

DURHAM COUNTY

STATION: 14+66.50 -L-

SHEET 4 OF 5

Dewberry
2610 WYCLIFF ROAD
SUITE 410
RALEIGH, NC 27607
PHONE: 919.881.9939
NC COA No. F-0929

NORTH CAROLINA PROFESSIONAL SEAL ENGINEER JENNIFER R. MCROY

DocuSigned by: Jennifer R. McRoy
E1132F2F20B2475...

3/14/2018

STATE OF NORTH CAROLINA
DEPARTMENT OF TRANSPORTATION
RALEIGH

3′-0″ X 3′-3″ PRESTRESSED CONCRETE BOX BEAM UNIT

REVISIONS								SHEET No.
No.	BY:	DATE:	No.	BY:	DATE:			S08
1			3					TOTAL SHEETS
2			4					21

DOCUMENT NOT CONSIDERED FINAL UNLESS ALL SIGNATURES COMPLETED

DRAWN BY :	JRM	DATE :	02/18
CHECKED BY :	LMP	DATE :	02/18

2/12/2018 11:50:57 AM
USER: jmcroy
S08_REDWOOD_SPANDTLS-2.dgn