DocuSign Envelope ID: 265CCDF1-B5FF-4EEE-ADEF-CF1A8E2DA2AF

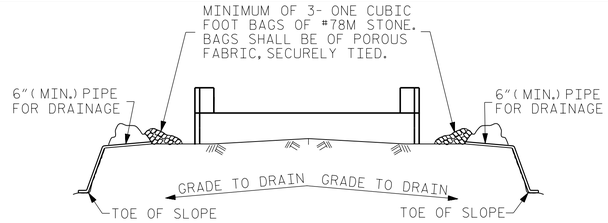

BAGGED STONE AND PIPE SHALL BE PLACED IMMEDIATELY AFTER COMPLETION OF END BENT EXCAVATION. PIPE MAY BE EITHER CONCRETE, CORRUGATED STEEL, CORRUGATED ALUMINUM ALLOY, OR CORRUGATED PLASTIC. PERFORATED PIPE WILL NOT BE ALLOWED.

BAGGED STONE SHALL REMAIN IN PLACE UNTIL THE ENGINEER DIRECTS THAT IT BE REMOVED. THE CONTRACTOR SHALL REMOVE AND DISPOSE OF SILT ACCUMULATIONS AT BAGGED STONE WHEN SO DIRECTED BY THE ENGINEER. BAGS SHALL BE REMOVED AND REPLACED WHENEVER THE ENGINEER DETERMINES THAT THEY HAVE DETERIORATED AND LOST THEIR EFFECTIVENESS.

NO SEPARATE PAYMENT WILL BE MADE FOR THIS WORK AND THE ENTIRE COST OF THIS WORK SHALL BE INCLUDED IN THE UNIT CONTRACT PRICE BID FOR THE SEVERAL PAY ITEMS.

TEMPORARY DRAINAGE AT END BENT

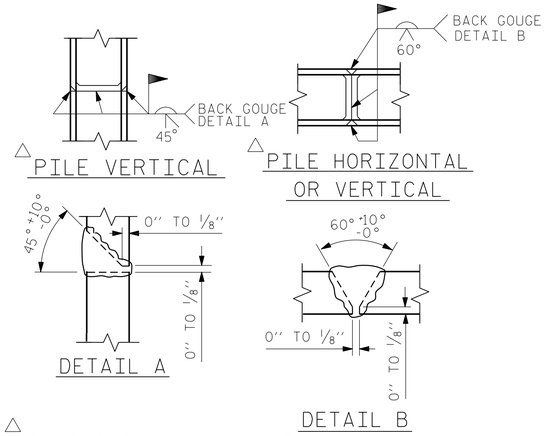

△ POSITION OF PILE DURING WELDING.

PILE SPLICE DETAILS

BAR TYPES

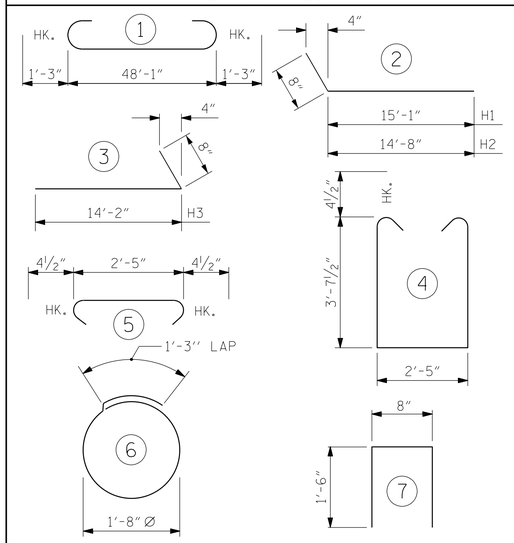

ALL BAR DIMENSIONS ARE OUT TO OUT.

BILL OF MATERIAL

FOR END BENT No. 2

BAR	NO.	SIZE	TYPE	LENGTH	WEIGHT
B1	8	#9	1	50'-7"	1376
B2	28	#4	STR	25'-4"	474
B3	12	#4	STR	2'-5"	19
D1	24	#8	STR	2'-3"	144
H1	16	#6	2	15'-9"	379
H2	16	#6	2	15'-4"	368
H3	32	#6	3	14'-10"	713
K1	12	#4	STR	3'-5"	27
K2	12	#4	STR	25'-4"	203
S1	62	#4	4	10'-5"	431
S2	62	#4	5	3'-2"	131
S3	28	#4	6	6'-6"	122
U1	41	#4	7	3'-8"	100
V1	77	#4	STR	7'-8"	394
V2	82	#4	STR	5'-9"	315

REINFORCING STEEL 5196 LBS.

CLASS A CONCRETE BREAKDOWN

POUR #1 CAP, LOWER PART OF WINGS & COLLARS 25.2 C.Y.

POUR #2 BACKWALL & UPPER PART OF WINGS 8.5 C.Y.

TOTAL CLASS A CONCRETE 33.7 C.Y.

END BENT No. 2
HP 12 X 53 STEEL PILES
NO: 7 LIN. FT.= 175

PILE DRIVING EQUIPMENT SETUP FOR HP 12 X 53 STEEL PILES NO: 7

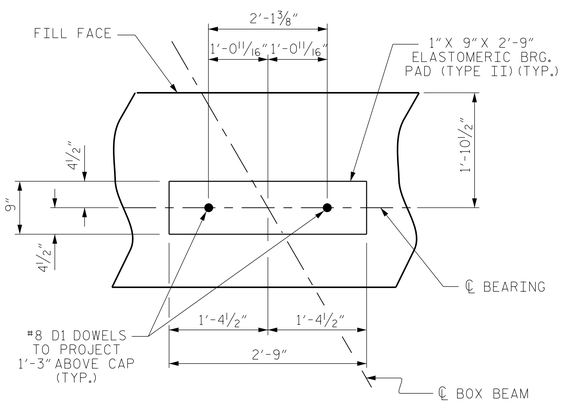

DETAIL "A"

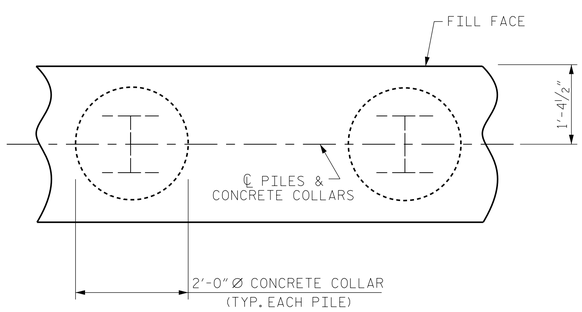

PLAN

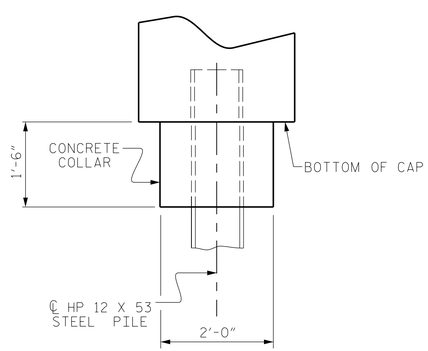

ELEVATION

CORROSION PROTECTION FOR STEEL PILES DETAIL

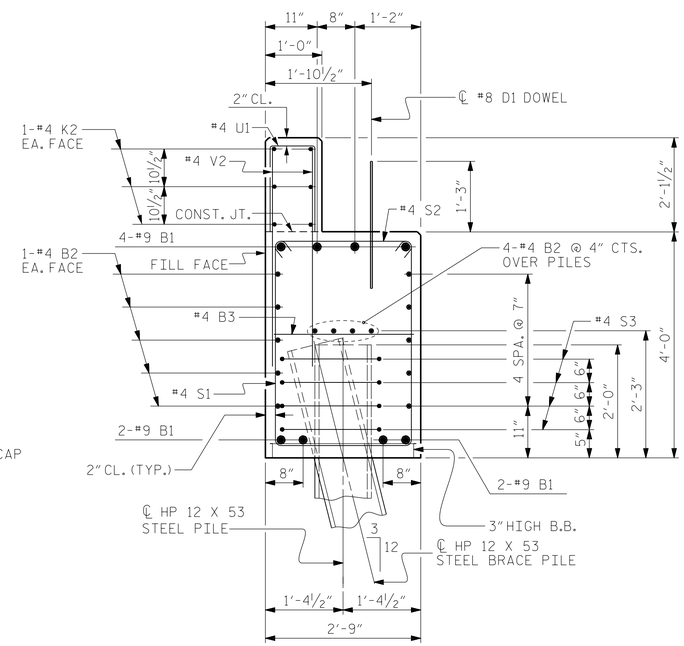

SECTION A-A

(CONCRETE COLLAR NOT SHOWN FOR CLARITY. SEE "CORROSION PROTECTION FOR STEEL PILES DETAIL.")

PROJECT NO. 15005.1032011
DURHAM COUNTY
STATION: 14+66.50 -L-

SHEET 3 OF 3

Dewberry
2610 WYCLIFF ROAD
SUITE 410
RALEIGH, NC 27607
PHONE: 919.881.9939
NC COA No. F-0929

NORTH CAROLINA PROFESSIONAL SEAL ENGINEER JENNIFER R. MCROY
DocuSigned by: Jennifer R. McRoy
E1F7C7B7B288475...
3/14/2018

STATE OF NORTH CAROLINA
DEPARTMENT OF TRANSPORTATION
RALEIGH

SUBSTRUCTURE

END BENT No. 2

REVISIONS							SHEET No.
No.	BY:	DATE:	No.	BY:	DATE:		S19
1			3				TOTAL SHEETS
2			4				21

ASSEMBLED BY : JRM DATE : 02/18
CHECKED BY : LMP DATE : 02/18

DOCUMENT NOT CONSIDERED FINAL UNLESS ALL SIGNATURES COMPLETED

2/12/2018 12:40:24 PM
S19_REDWOOD RD_EB2DTLS.dgn
USER: mcroy